10 YEARS
LIGHTWEIGHT
E-BIKE
EXPERIENCE
vivax
assist
2017 | E
...RIDE ON(E)!

THE DRIVE UNIT

THE WORLD'S LIGHTEST DRIVE UNIT FOR BICYCLES · WEIGHING ONLY 1.8 KG INCL. BATTERY

GUARANTEE

Intensive development work and high tech materials guarantee accuracy and longevity. We offer a guarantee of 3 years or 1.000 hours according the valid warranty terms.

USER OPERATING UNIT

- Start/stop
- Alter motor assist RPM
- Display motor performance
- Battery indicator

THE MOTOR

Mini motor hidden in the seat tube. Long lasting and maintenance-free.

THE CONTROLLER

Intelligent electronic control allows the rider to alter the rpm at which the motor drives the pedals.

THE BATTERY PACK

Two designs of mini Li-ION battery pack weighing from 850 g., with run time from 60 to 100 mins (larger capacity option). Available as bottle battery or saddle bag option. Partial charges possible.

THE CHARGER

Easy wall plug charging. At only 506 g. a trusty lightweight companion on tour. Charging time 3 - 4.5 h, depending on battery type.

LIGHT. SPORTY. STYLISH.

Sophisticated motor power hidden in the bike‘s seat tube.
Press the button and the motor delivers the optimal performance to the crank-shaft; press the button again and the motor stops. Without motor power the bike functions as normal without any kind of resistance.
Weighing only 1.8 kg (including battery) it is the world‘s lightest E-Bike kit.

PERFORMANCE OUTPUT AND OPTIMIZING THE RANGE

VARIANT: VIVAX ASSIST 4.75 – CONSTANT TORQUE 15,3 NM

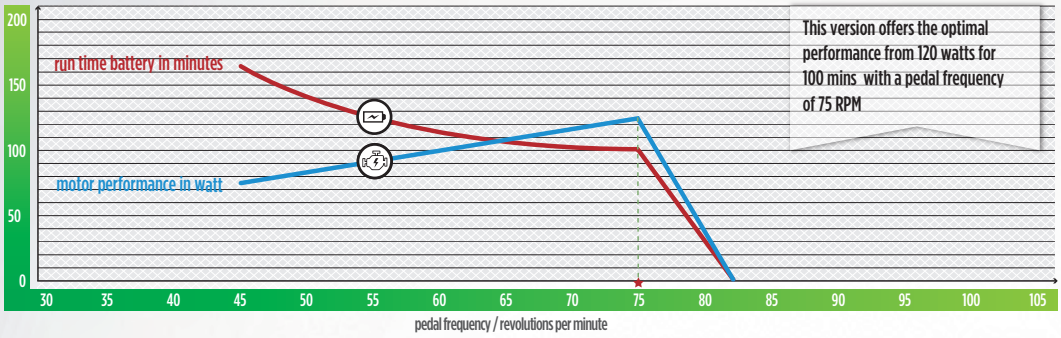

VARIANT: VIVAX ASSIST 4.90 – CONSTANT TORQUE 12,7 NM

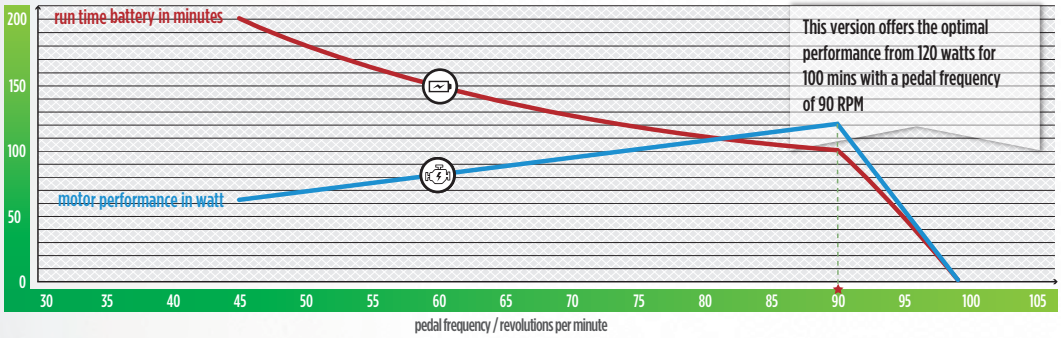

RANGE

VIVAX ASSIST 4.75 9AH-BATTERY	1.200-2.000 DIFFERENCE IN ALTITUDE	100-165 MINUTES	41–68 KILOMETRES
VIVAX ASSIST 4.90 9AH-BATTERY	1.200-2.400 DIFFERENCE IN ALTITUDE	100-200 MINUTES	41–83 KILOMETRES

BALANCE OUT PERFORMANCE DIFFERENCES

vivax assist‘s seat tube motor balances out the performance difference between riding partners in a way other systems can‘t.
The constant torque allows an even support and makes additional modes entirely obsolete. The rider‘s personal contribution and speed are factored in by shifting gear, keeping the motor rpm at a high efficiency. None of the group find the riding too taxing and none find it too easy!

EXAMPLE OF A DAY TRIP WITH VERSION VIVAX ASSIST 4.75

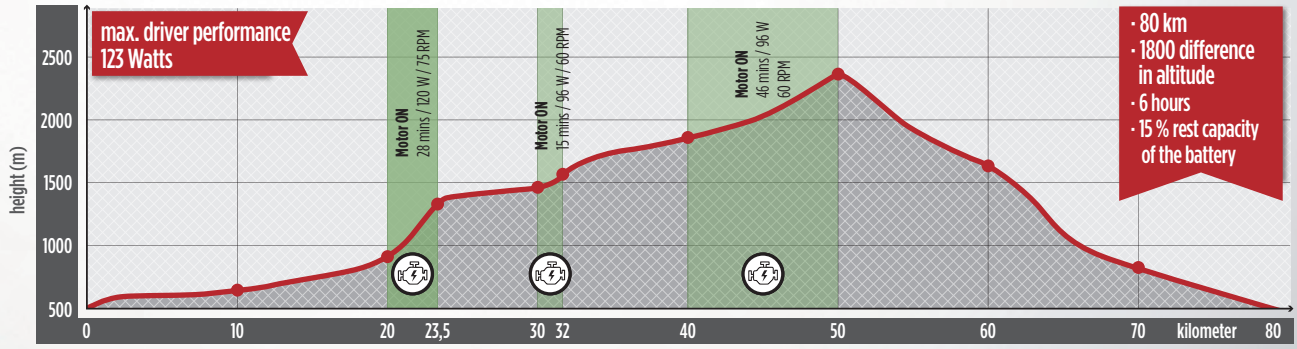

difference in altidude	150	200	450	100	200	200	500			1800 difference	
average gradient	1,5%	2,0%	12,9%	1,5%	10,0%	2,5%	5,0%			in altidude	
km/h	13	11	7,5	13	8	11	13				
required overall performance (W)	121	112	237	121	208	123	211				
driver-/Motorpeformance (W)	121/0	112/0	117/120	121/0	112/96	123/0	115/96				
travel Time	46 mins	55 mins	28 mins	30 mins	15 mins	44 mins	46 mins	30 mins	30 mins	30 mins	354 mins

2-IN-1 PRINCIPLE

One Bicycle - two functions. The vivax 2-in-1 principle means you can easily mix active sports cycling with assited riding. The basic function of the bicycle remains because of the low weight and the perfect position of the motor in the seat tube.

FIELDS OF APPLICATIONS

With vivax's 2-in-1 principle all kinds of training in any type of terrain is possible. **No limits, and training is fun!**

POWER & ENDURANCE

POWER & ENDURANCE + MOTOR

BALANCE OUT PERFORMANCE DIFFERENCES

ORIGINAL BIKE-FEELING

...MAINTAIN AN AUTHENTIC FEELING RIDE

LONG DISTANCE / BARELY WEIGHT

LONGER DAY RIDES POSSIBLE

POWER AS NEEDED

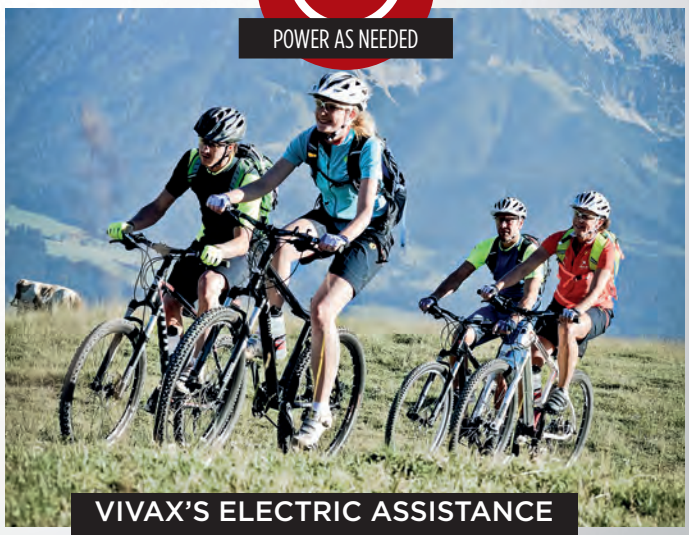

VIVAX'S ELECTRIC ASSISTANCE ISN'T NEEDED ALL THE TIME

...THE ALL MOUNTAIN BIKE FOR PURE DRIVING PLEASURE

No other electric motor combines sports cycling with comfort and electronic support like the vivax assist. Both the bike‘s aesthetics and an authentic feeling ride are preserved.

VIVAX LIBERO 27,5”

			kg
S, M, L		27,5“	15,3 kg

PURE FREEDOM:
Light-footed uphill – **breathtaking in Trail**

EQUIPMENT:

FRAME: Alu All-Mountain-Fully 27,5” | **MOTOR**: *vivax assist* | **REAR DERAILLEUR:** Shimano XT 2x11
FORK: Rock Shox FS Pike, 150 mm | **DAMPER:** Rock Shox Monarch RT3, 150 mm
BRAKES: Shimano XT 180/180 mm | **TIRES:** Continental Trail King 2.4

.....THE IDEAL TRAINING DEVICE

You, not the terrain, determine your performance level. Decide where you use the motor and where you can ride. Cicle at a constant optimum heart rate is possible at any time.

VIVAX PREVIO 27,5”

42 46, 50, 53	Variation see page 15	27,5“	10,7 kg

A true lightweight amongst E-MTBs

EQUIPMENT:

FRAME: Alu MTB 27,5” | **MOTOR**: *vivax assist* | **REAR DERAILLEUR:** Shimano XTR 2x11
FORK: Rock Shox Reba RL | **BRAKES:** Shimano XTR 180/160 mm | **TIRES:** Continental X-King 2.2

...ENLARGED ROUTE PLANNING

Cycling with vivax assist is growing the self-confidance and cycling passion, as you conquer new routes and undreamed of longer distances.

VIVAX OPTIMO 27,5”

			kg
42, 45, 48, 51		27,5“	12,9 kg

Mountainbiking - **delightfully sporty**

EQUIPMENT:

FRAME: Alu MTB 27,5” | **MOTOR**: *vivax assist* | **REAR DERAILLEUR:** Shimano XT 2x11
FORK: Rock Shox Reba RL | **BRAKES:** Shimano XT 180/160 mm | **TIRES:** Continental Race King 2.2

VIVAX PICCO 29”

40, 44, 48, 53	Variation see page 15	29“	12,9 kg

Light – sporty – stylish
Pure driving pleasure

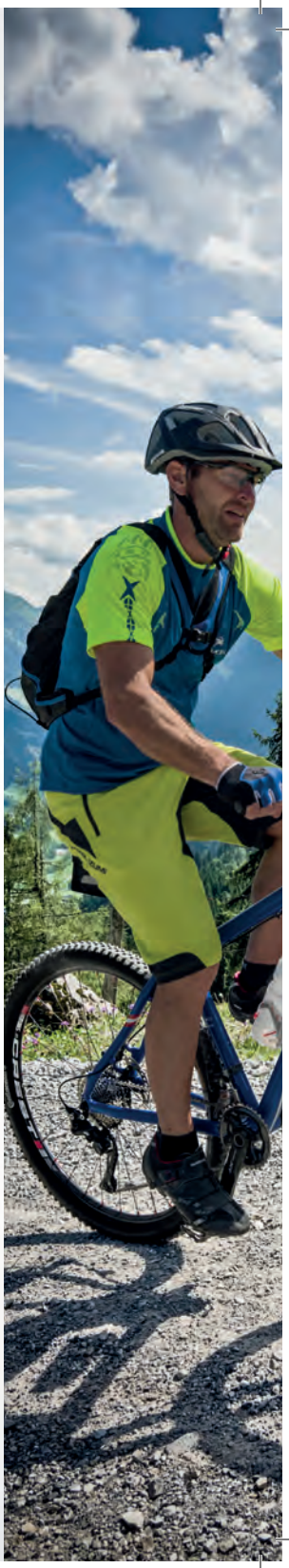

EQUIPMENT:

FRAME: Alu MTB 29” | **MOTOR**: *vivax assist* | **REAR DERAILLEUR:** Shimano XT 2x11
FORK: Rock Shox Reba RL | **BRAKES:** Shimano XT 180/160 mm | **TIRES:** Continental X-King 2.2

COLOR VARIATION PREVIO AND PICCO

FRAME COLORS:

- RAL 5015 sky blue
- RAL 901 traffic white
- RAL 2002 ruby red
- RAL 1016 sulfur yellow / yellow green

FRAME

FRAME

FRAME

FRAME

VIVAX PRIMO 26”

			kg
40, 44, 48, 52, 56		26“	14,4 kg

The allrounder
for the newcomer

EQUIPMENT:

FRAME: Alu MTB 26” | **MOTOR**: *vivax assist* | **REAR DERAILLEUR:** Shimano Deore/XT 2x11
FORK: Rock Shox XC 30 TK | **BRAKES:** Shimano BR-M 396 180/160 mm | **TIRES:** Continental X-King 2.2

VIVAX VIATERRA 28”

43, 48, 53, 56		28“	14,4 kg

The optimal escort
for easygoing trips
with solid, reliable components

EQUIPMENT:

FRAME: ALU Cross 28” | **MOTOR**: *vivax assist* | **REAR DERAILLEUR:** Shimano XT 3x10
FORK: Starrgabel | **BRAKES:** Shimano V-Brake | **TIRES:** Continental Tour Ride | additional features available

Kitzbüheler Alpen
www.kitzalps.com/hohe-salve

E-RACE AREA
KITZBÜHELER ALPEN

VIVAX PASSIONE CF DISC - FRAME KIT

		kg
48, 51, 54, 57, 60		3,7 kg

FRAME KIT VIVAX PASSIONE CF DISC

FRAME: Road Carbon | **CRANK SET:** Shimano Ultegra | **FORK:** Carbon | **MOTOR:** *vivax assist*

VIVAX FORZA CF - HANDMADE

Hand-crafting also ensures customized designs can be produced; any cyclist finds his or her ideal frame. Purist and noble.

		kg
S,M,L and customized	Clear or all RAL-Colors	3,2 kg

FRAME KIT VIVAX FORZA CF

FRAME: Road Carbon | **CRANK SET:** Shimano Ultegra
FORK: Carbon | **MOTOR:** *vivax assist* | **SIZES:** S,M, L & custumized | **WEIGHT FRAME:** 860 g
WEIGHT FORK : 360 g | **WEIGHT ELECTRIC MOTOR (INCL. BATTERY):** 1.800 g.

VIVAX PASSIONE CF DISC

			kg
48, 51, 54, 57, 60		700c	10,3 kg

E-Racer

With the vivax assist **“Invisible Performance Package”** you can invisibly transform your racing bike into an e-racer.
- bottle battery
- wireless start button

EQUIPMENT:

FRAME: Carbon Road | **MOTOR:** *vivax assist* | **REAR DERAILLEUR:** Shimano Ultegra 2x11 | **FORK:** Carbon | **BRAKES:** Shimano Ultegra Disc
WHEELSET: Shimano RX 700x23c

CUSTOMIZE YOUR OWN VIVAX:

www.vivax-assist.com

VIVAX-ONLINE-CONFIGURATOR

MOTOR

VIVAX-ONLINE-CONFIGURATOR

SIZE

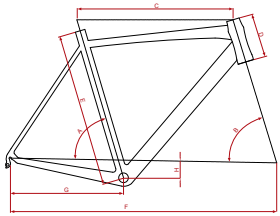

VIVAX-ONLINE-CONFIGURATOR

COLORS

VIVAX-ONLINE-CONFIGURATOR

BATTERY

VIVAX-ONLINE-CONFIGURATOR

USER OPERATING UNIT

VIVAX-ONLINE-CONFIGURATOR

SEAT POST INCL. CONTROLLER

VIVAX-ONLINE-CONFIGURATOR

INVISIBLE PERFORMANCE PACKAGE

VIVAX-ONLINE-CONFIGURATOR

EQUIPMENT

VIVAX-ONLINE-CONFIGURATOR

CUSTOMIZATION

VIVAX ASSIST RETROFIT

FROM BIKE TO E-BIKE!

The vivax assist can be installed in normal mountainbikes, road bikes, crossbikes and trekkingbikes by a certified vivax dealer

FRAME PREREQUISITES

- Aluminium, steel or vivax carbon frame
- Straight, continuous seat tube (with an inner diameter of 31.6 mm or 30.9 mm)
- Seat tube should be as central as possible on the bottom bracket
- Shimano Hollowtech II – *crank set not included!*

MADE IN AUSTRIA

HIGH QUALITY PRODUCT MADE IN THE AUSTRIAN TYROL

The company's technical know-how, Tyrolean mountain inspiration and enthusiasm for cycling produced the world's lightest electric motor for bicycles.
Developed and produced in the Tyrol - made for mountains worldwide.

GEOMETRIES

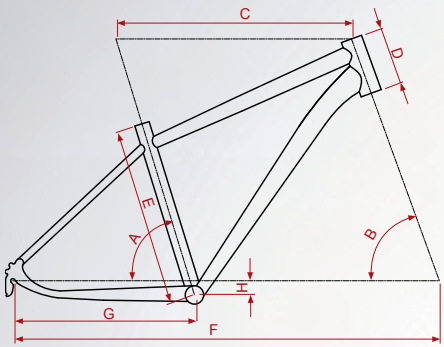

	VIVAX PREVIO 27,5"				
	Size in cm	42	46	50	53
A	**Seat Tube Angle**	73,5	73,5	73,5	73,5
B	**Head Tube Angle**	69	69	69	69
C	**Top Tube Length**	575	595	615	635
D	**Head Tube Length**	100	110	120	130
E	**Seat Tube length**	420	460	500	530
F	**Wheelbase**	1083	1104	1125	1145
G	**Chainstay Length**	430	430	430	430
H	**BB**	-40	-40	-40	-40

	VIVAX OPTIMO 27,5"				
	Size in cm	42	45	48	51
A	**Seat Tube Angle**	73,5	73,5	73,5	73,5
B	**Head Tube Angle**	70,5	70,5	70,5	70,5
C	**Top Tube Length**	560	570	585	605
D	**Head Tube Length**	105	130	130	140
E	**Seat Tube length**	420	450	480	510
F	**Wheelbase**	1052	1065	1078	1099
G	**Chainstay Length**	427	427	427	427
H	**BB**	-32	-32	-32	-32

	VIVAX PICCO 29"				
	Size in cm	40	44	48	53
A	**Seat Tube Angle**	72,5	72,5	72,5	72,5
B	**Head Tube Angle**	69,5	69,5	69,5	69,5
C	**Top Tube Length**	590	600	620	640
D	**Head Tube Length**	105	115	125	140
E	**Seat Tube length**	400	440	480	530
F	**Wheelbase**	1092	1103	1123	1144
G	**Chainstay Length**	445	445	445	445
H	**BB**	-60	-60	-60	-60

	VIVAX PRIMO 26"					
	Size in cm	40	44	48	52	56
A	**Seat Tube Angle**	74	73,5	73,5	73,5	73,5
B	**Head Tube Angle**	70	70	70	70	70
C	**Top Tube Length**	540	560	580	600	620
D	**Head Tube Length**	110	120	130	140	150
E	**Seat Tube length**	400	440	480	520	560
F	**Wheelbase**	1035	1050	1067	1091	1112
G	**Chainstay Length**	425	425	425	425	425
H	**BB**	-30	-30	-30	-30	-30

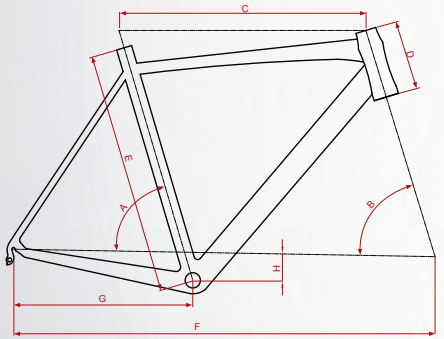

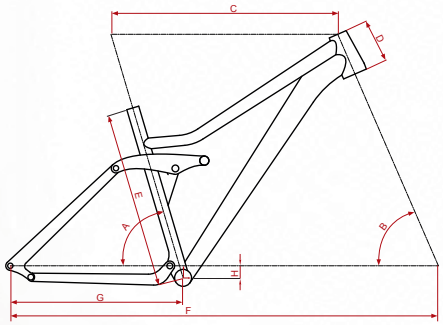

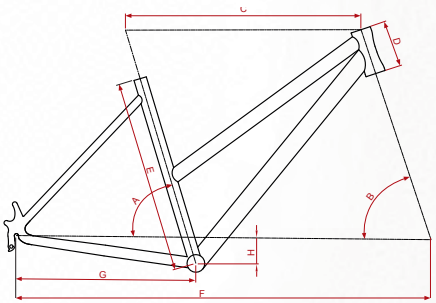

	VIVAX PASSIONE CF DISC						
	Size in cm	45	48	51	54	57	60
A	**Seat Tube Angle**	75	74,5	73,5	73,5	73	73
B	**Head Tube Angle**	72,5	72,5	72,5	73	73	73
C	**Top Tube Length**	515	525	540	550	575	590
D	**Head Tube Length**	95	95	120	155	190	215
E	**Seat Tube length**	450	480	510	540	570	600
F	**Wheelbase**	961	966	973	979	995	1020
G	**Chainstay Length**	415	415	415	415	415	420
H	**BB**	-72	-72	-70	-70	-67	-67,5

VIVAX FORZA CF: CUSTOMIZED

	VIVAX LIBERO CF			
	Size in cm	S	M	L
A	**Seat Tube Angle**	74,5	74,5	74,5
B	**Head Tube Angle**	67	67	67
C	**Top Tube Length**	575	595	615
D	**Head Tube Length**	100	115	130
E	**Seat Tube length**	450	460	470
F	**Wheelbase**	1148	1165	1193
G	**Chainstay Length**	451	451	451
H	**BB**	-14	-14	-14

	VIVAX VIATERRA 28"				
	Size in cm	43	48	53	56
A	**Seat Tube Angle**	74	73,5	73,5	73
B	**Head Tube Angle**	71	71	71	71
C	**Top Tube Length**	565	575	575	585
D	**Head Tube Length**	120	145	165	185
E	**Seat Tube length**	430	480	530	560
F	**Wheelbase**	1065	1071	1072	1078
G	**Chainstay Length**	445	445	445	445
H	**BB**	-55	-55	-55	-55

All informations about weight inkl. 6 Ah-battery | without pedals | Size in cm, Angle in ° | all other measures in mm

TECHNICAL DATA

DRIVE COMPONENTS

- 200 Watts service-free motor
- High-tech gear
- Freewheel
- Length of the drive: 220 mm
- Diameter of the drive 31.6 mm or 30.9 mm
- Weight of the mechanical drive unit: approx. 730 g.

ELECTRONIC CONTROL

- Integrated in seat post
- Dimensions 180 x 24.5 mm
- Weight 120 g.

SEAT POST

- Aluminium seat post length 350 mm, weight 278 g.
  Optional:
- Suspension seatpost Cane Creek Thudbuster ST, length 350 mm, weight 445 g.
- Carbon fibre seatpost, length 350 mm, weight 213 g.

BATTERY

· Lithium-Ion battery (180 Wh)
· 30 V, 6.0 Ah, 60 mins running time
· Dimensions 140 x 65 x 55 mm
· Weight 850 gr.
· Battery indicator
● ● ● ● ● = full
● ○ ○ ○ ○ = empty

· Lithium-Ion battery (270 Wh)
· 30 V, 9.0 Ah, 100 mins running time
· Dimensions 124 x 70 x 75 mm
· Weight 1.250 gr.
· Battery indicator
● ● ● ● ● = full
● ○ ○ ○ ○ = empty

INVISIBLE PERFORMANCE PACKAGE

- Bottle battery
- Optional in all RAL colours
- 30 V, 6.0 Ah (180 Wh), 60 mins running time
- Dimensions Ø 74 mm, 260 mm high, 750 ml
- Weight 985 g.
- Wireless start button in the handlebar

LITHIUM-ION CHARGER

- 33.6 V charge voltage
- Dimensions 130 x 75 x 54 mm
- Weight 506 g.
- 3 A charging current

USER OPERATING UNIT

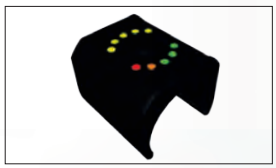

· Start/stop
· Alter motor assist RPM
· Display motor performance
· Battery indicator

SADDLEBAG

- Dimensions 170 x 80 x 85 mm

Technical changes and misprints in graphic or writing reserved | Design: Das Buero ohne Namen | Photographs: *sternmanufaktur, Hannes Dabernig, Eisele Hein

10 YEARS LIGHTWEIGHT E-BIKE EXPERIENCE

...RIDE ON(E)!

DEALER

WWW.*vivax-assist*.COM

VIVAX DRIVE GMBH & CO KG | BRIXENTALERSTR. 51 | 6300 WÖRGL | T: +43 5332 70317 | INFO@VIVAX-ASSIST.COM